Taper Bushings Dimensions

No. 1008 to 3030 Taper Bushings

Bushing Number	Bore	Wt. lbs (appr)	Bushing Keyseat	Shaft Keyseat
1008	1/2 to 9/16	.27	1/8 × 1/16	1/8 × 1/16
	5/8 to 7/8	.21	3/16 × 3/32	3/16 × 3/32
	15/16 to 1	.16	1/4 × 1/16 ▼	1/4 × 1/8
1108	1/2 to 9/16	.33	1/8 × 1/16	1/8 × 1/16
	5/8 to 7/8	.27	3/16 × 3/32	3/16 × 3/32
	15/16 to 1	.22	1/4 × 1/8	1/4 × 1/8
	1-1/16 to 1-1/8	.17	1/4 × 1/16 ▼	1/4 × 1/8
1210	1/2 to 9/16	.61	1/8 × 1/16	1/8 × 1/16
	5/8 to 7/8	.55	3/16 × 3/32	3/16 × 3/32
	15/16 to 1-1/4	.49	1/4 × 1/8	1/4 × 1/8
1215	1/2 to 9/16	.8	1/8 × 1/16	1/8 × 1/16
	5/8 to 7/8	.7	3/16 × 3/32	3/16 × 3/32
	15/16 to 1-1/4	.6	1/4 × 1/8	1/4 × 1/8
1310	1/2 to 9/16	.7	1/8 × 1/16	1/8 × 1/16
	5/8 to 7/8	.7	3/16 × 3/32	3/16 × 3/32
	15/16 to 1-1/4	.6	1/4 × 1/8	1/4 × 1/8
	1-5/16 to 1-3/8	.6	5/16 × 5/32	5/16 × 5/32
1610	1/2 to 9/16	.9	1/8 × 1/16	1/8 × 1/16
	5/8 to 7/8	.8	3/16 3/32	3/16 3/32
	15/16 to 1-1/4	.7	1/4 × 1/8	1/4 × 1/8
	1-5/16 to 1-3/8	.7	5/16 × 5/32	5/16 × 5/32
	1-7/16 to 1-1/2	.6	3/8 × 3/16	3/8 × 3/16
	1-9/16 to 1-5/8	.5	3/8 × 1/8 ▼	3/8 × 3/16
1615	1/2 to 9/16	1.2	1/8 × 1/16	1/8 × 1/16
	5/8 to 7/8	1.1	3/16 × 3/32	3/16 × 3/32
	15/16 to 1-1/4	1.0	1/4 × 1/8	1/4 × 1/8
	1-5/16 to 1-3/8	.8	5/16 × 5/32	5/16 × 5/32
	1-7/16 to 1-1/2	.7	3/8 × 3/16	3/8 × 3/16
	1-9/16 to 1-5/8	.6	3/8 × 1/8 ▼	3/8 × 3/16
2012	1/2 to 9/16	1.7	1/8 × 1/16	1/8 × 1/16
	5/8 to 7/8	1.6	3/16 × 3/32	3/16 × 3/32
	15/16 to 1-1/4	1.5	1/4 × 1/8 ▼	1/4 × 1/8
	1-5/16 to 1-3/8	1.4	5/16 × 5/32	5/16 × 5/32
	1-7/16 to 1-3/4	1.2	3/8 × 3/16	3/8 × 3/16
	1-13/16 to 1-7/8	1.0	1/2 × 1/4	1/2 × 1/4
	1-15/16 to 2	1.0	1/2 × 3/16 ▼	1/2 × 1/4
2517	1/2 to 9/16	3.5	1/8 × 1/16	1/8 × 1/16
	5/8 to 7/8	3.4	3/16 × 3/32	3/16 × 3/32
	15/16 to 1-1/4	3.3	1/4 × 1/8	1/4 × 1/8
	1-5/16 to 1-3/8	3.2	5/16 × 5/32	5/16 × 5/32
	1-7/16 to 1-3/4	3.0	3/8 × 3/16	3/8 × 3/16
	1-13/16 to 2-1/4	2.4	1/2 × 1/4	1/2 × 1/4
	2-5/16 to 2-1/2	1.9	5/8 × 3/16 ▼	5/8 × 5/16
2525	3/4 to 7/8	4.9	3/16 × 3/32	3/16 × 3/32
	15/16 to 1-1/4	4.7	1/4 × 1/8	1/4 × 1/8
	15-/16 to 1-3/8	4.5	5/16 × 5/32	5/16 × 5/32
	1-7/16 to 1-3/4	4.2	3/8 × 3/16	3/8 × 3/16
	1-13/16 to 2-1/4	3.3	1/2 × 1/4	1/2 × 1/4
	2-5/16 to 2-1/2	2.5	5/8 × 3/16 ▼	5/8 × 5/16
3020	15/16 to 1-1/4	6.5	1/4 × 1/8	1/4 × 1/8
	1-5/16 to 1-3/8	6.3	5/16 × 5/32	5/16 × 5/32
	1-7/16 to 1-3/4	6.0	3/8 × 3/16	3/8 × 3/16
	1-13/16 to 2-1/4	5.3	1/2 × 1/4	1/2 × 1/4
	2-5/16 to 2-3/4	4.5	5/8 × 5/16	5/8 × 5/16
	2-13/16 to 3	3.9	3/4 × 1/4 ▼	3/4 × 3/8
3030	15/16 to 1-1/4	9.2	1/4 × 1/8	1/4 × 1/8
	1-5/16 to 1-3/8	8.9	5/16 × 5/32	5/16 × 5/32
	1-7/16 to 1-3/4	8.6	3/8 × 3/16	3/8 × 3/16
	1-13/16 to 2-1/4	7.6	1/2 × 1/4	1/2 × 1/4
	2-5/16 to 2-3/4	6.2	5/8 × 5/16	5/8 × 5/16
	2-13/16 to 3	5.0	3/4 × 1/4 ▼	3/4 × 3/8

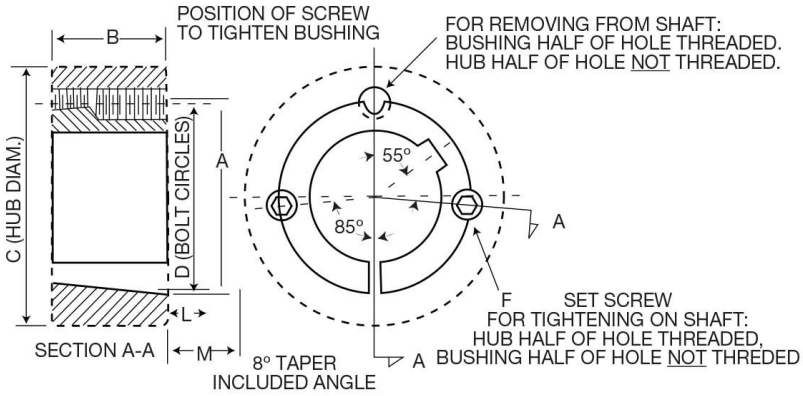

Dimensions

Bushing Number	A	B	C Ø			D	F †	L ★		M ★★	
			Class 20 Gray Iron	Class 30 Gray Iron	Steel			Standard Hex. Key	Short Key ‡	Standard Hex. Key	Short Key ‡
1008	1.386	7/8	2-3/8	2-3/16	1-15/16	1-21/64	1/4 × 1/2	1-1/8	5/8	1-1/4	3/4
1108	1.511	7/8	2-1/2	2-5/16	2-1/16	1-29/64	1/4 × 1/2	1-1/8	5/8	1-1/4	3/4
1210	1-7/8	1	3-5/8	3-1/4	2-7/8	1-3/4	3/8 × 5/8	1-3/8	13/16	1-5/8	1-1/16
1215	1-7/8	1-1/2	3-1/8	2-7/8	2-5/8	1-3/4	3/8 × 5/8	1-3/8	13/16	1-5/8	1-1/16
1310	2	1	3-3/4	3-3/8	3	1-7/8	3/8 × 5/8	1-3/8	13/16	1-5/8	1-1/16
1610	2-1/4	1	4	3-5/8	3-1/4	2-1/8	3/8 × 5/8	1-3/8	13/16	1-5/8	1-1/16
1615	2-1/4	1-1/2	3-1/2	3-1/4	3	2-1/8	3/8 × 5/8	1-3/8	13/16	1-5/8	1-1/16
2012	2-3/4	1-1/4	4-3/4	4-3/8	3-7/8	2-5/8	7/16 × 7/8	1-9/16	15/16	2	1-3/8
2517	3-3/8	1-3/4	5-1/2	4-7/8	4-3/8	3-1/4	1/2 × 1	1-5/8	1	2-1/4	1-5/8
2525	3-3/8	2-1/2	4-3/4	4-1/2	4-1/4	3-1/4	1/2 × 1	1-5/8	1	2-1/4	1-5/8
3020	4-1/4	2	7	6-1/4	5-5/8	4	5/8 × 1-1/4	1-13/16	1-3/16	2-11/16	2-1/16
3030	4-1/4	3	6-1/4	5-3/4	5-3/8	4	5/8 × 1-1/4	1-13/16	1-3/16	2-11/16	2-1/16

Bushings cannot be bored larger than largest bore listed.

For detail dimensions required for machining hubs, consult factory.

▼ Key furnished for these sizes only.

Ø For general reference. Severe conditions may require larger hub. Heavy well-located web may permit smaller hub. Hub diameter required depends on the particular application. Consult giving full information on the proposed design. Hub diameters shown are based on 20,000, 30,000, and 50,000 P.S.I. minimum ultimate tensile strength respectively for Class 20 gray iron, Class 30 gray iron, and steel hubs.

† 2 screws required. Use in positions shown for tightening bushing on shaft. In removing bushing from shaft, remove screws and use one of them in the other hole. Bushing price includes screws.

★ Space required to tighten bushing. Also space required to loosen screws to permit removal of hub by puller.

★★ Space required to loosen bushing using one screw as jackscrew — no puller required.

‡ Standard hex key cut to minimum usable length.